The Study of Flank Wear for Cutting Tool in Turning

Prepared by

Halat Kakabra

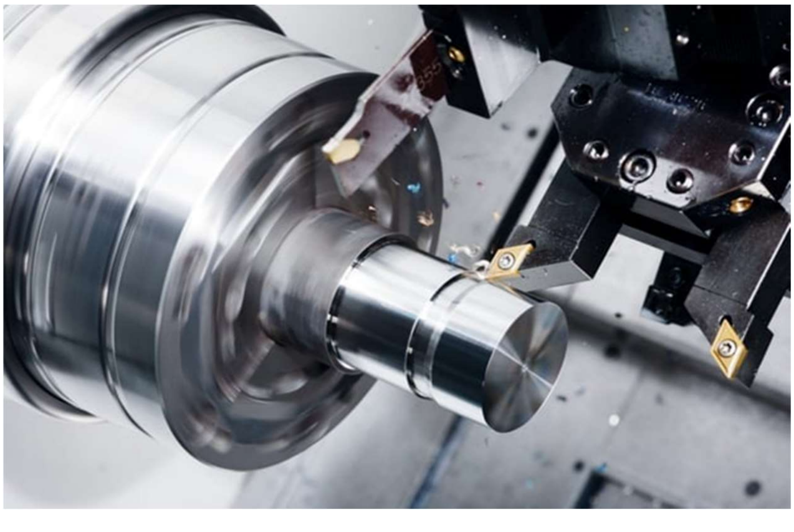

Contents

Chapter One

Chapter Two

Chapter Three

1-1- CUTTING TOOL GEOMETRY:-

To understand the cutting action of a single-point tool as applied to a lathe, refer to (fig.1). The tool has been ground to a wedge shape, the included angle being called the lip or cutting angle. The side clearance angle between the side of the tool and the work is to prevent the tool from rubbing. This angle is small, usually (6؛) to (8؛) for most materials. The side rake angle varies with the lip angle, which in turn depends on the type of material being machined. If the cutting tool is supported in horizontal position, the back rake angle is obtained by grinding. However, most tool holders are designed to hold the tool in an approximate for the correct back rake. End clearance is necessary to prevent a rubbing action on the flank of the tool. The angles shown in fig.(1) are for a cutting tool mounted horizontally and normal to the work-piece. The effective angles can be changed by adjustment to the tool holder without changing the angles ground on the tool.

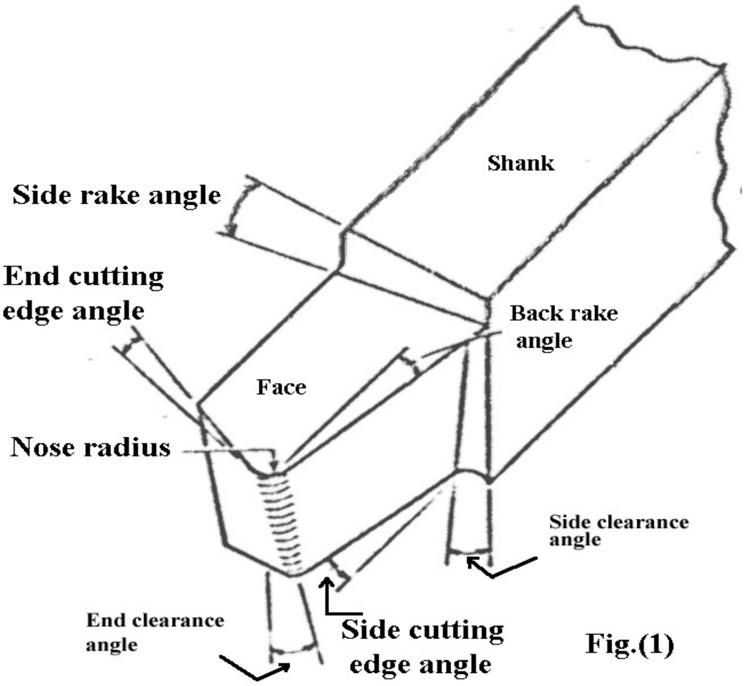

Fig.(1)

In general it is based on the hardness of the work-piece. Hard materials require a cutting edge of great strength with a capacity for carrying away heat. Soft materials permit the use of smaller cutting angles, around (22؛) for wood tools. Soft and ductile metals such as copper and aluminum require larger angles ranging up to (47؛), where as brittle materials, having chips that crumble or break easily, require still larger angles. An interesting variation in tool angles is that recommended for brass and duralumin. These materials work best with practically zero rakes, the cutting action being a scraping one. Because of the high ductility, the will dig in andtear the metal if the small cutting angle is used. Research has indicated approximate tool angles and cutting speed for a number of materials.

1-2-ORTHOGONAL CUTTING AND OBLIQUE CUTTING:-

The metal cutting processes are of two types:-

(i) Orthogonal cutting process (two-dimensional cutting).

Orthogonal cutting: Orthogonal (two dimensional) cutting occurs when the major cutting edge of the tool is presented to the work piece perpendicular to the direction of feed motion. Orthogonal cutting involves only two faces and this makes analysis of cutting motion much easier. (Fig. 2).

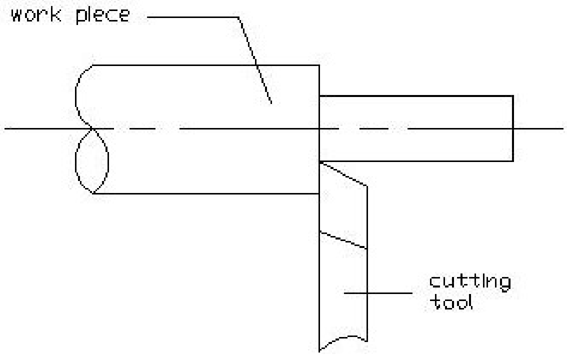

FIG. (2) (2-dimension)

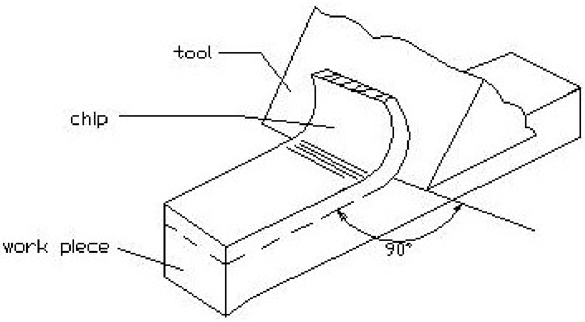

FIG. (2) (3-dimension)

(ii) Oblique cutting process (three-dimensional cutting).

Oblique cutting: this form of cutting occurs when the major edge of cutting tool is presented to the work piece at an angle which is not perpendicular to the direction of feed motion. (Fig .3).

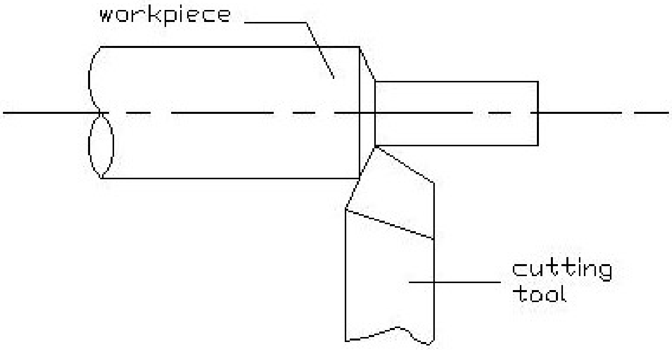

FIG. (3) (2-dimesion)

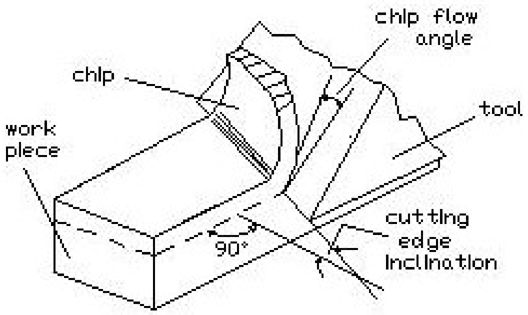

FIG.(3) (3-dimension)

1-3-CUTTING TOOL MATERIALS:-

Cutting tools must possess certain mechanical properties in order to function adequately during the cutting operations. These properties include high hardness and the ability to retain it even at the elevated temperatures generated during cutting. They also include toughness, creep and abrasion resistance, and the ability to withstand high bearing pressures. In fact, cutting materials differ in the degree to which they possess each of those mechanical properties. Therefore, a cutting materials is selected to suit the cutting conditions, such as the work piece materials, cutting speed (production rate), coolant used, and so on. Following is survey of the commonly used cutting tool materials.

HIGH SPEED STEEL:

high speed steel (HSS) is a kind of alloy steel that contains a reasonable percentage of alloying elements, such a tungsten (18 percent), chromium (4 percent), molybdenum, vanadium, and cobalt. High speed steel is heat- treated by heating (at two stages), cooling by employing a stream of air, and then tempering it. Tools made of HSS can retain their hardness at elevated temperatures up to1100F (600˚C). These tools are used when relatively high cutting speeds are required. Single point tools, twist tools, and milling cutters are generally made of HSS, except when those tools are required for high-production machining.

SINTERED CEMENTED-CARBIDE TIPS:

Sintered cemented carbides are always molded to shape by the powder metallurgy technique, i.e., pressing and sintering. Since it is impossible to manufacture the whole tool of cemented carbide because of the strength consideration, only tips are made of that material; these tips are brazed or mechanically fastened to steel shanks, which have the required cutting angles. They retain such hardness even at temperatures of up to 1850F (1000˚C). Recent developments involve employing combinations of tungsten, titanium, and tantalum carbides with cobalt or nickel alloy as binders.

CERAMIC TIPS:

Ceramic tips consist basically of very fine alumina powder (Al_2O_3) which is molded by pressing and sintering. Ceramics have almost the same hardness as cemented carbides, but they can retain that hardness up to the temperature of 2200F (1100˚C) and have a very low coefficient of thermal conductivity. Such properties enable cutting to be performed at speeds that range from two to three times the cutting speed when carbide tips are employed. Ceramic tips are also characterized by their superior resistance to wear and to the formation of crater cavities, and they require no coolants. Nevertheless, their toughness and bending strength are low, which must be added to their sensitivity to creep loading and vibration. Therefore, ceramic tips are recommended only for finishing operations (small depth of cut) at extremely high cutting speeds of up to 1800 ft/min. (600 m/min).

DIAMOND:

Diamonds used a single-point tool for light cuts and high speeds must be rigidly supported because of their high hardness and brittleness. They are used either for hard materials difficult to cut with other tool materials or for light, high-speed cuts on softer materials where accuracy and surface finish are important. Diamonds are commonly used in machining plastics, hard rubber, pressed carbon, and aluminum with cutting speeds from 1000 to 5000 ft/min. (5-25 m/s). Diamonds are also used for dressing grinding wheels, for small, wire-drawing dies, and in certain grinding and lapping operations.

1-4-SURFACE FINISH and ACCURACY:-

A fine surface can be taken to mean which has a greater degree of smoothness than is customarily produced by normal cutting method. More accurately a tool does it work the less rough is the surface produced. The selection of the method by which a surface is to be produced will depend on a large number of variables ranging from the physical limitation imposed by the materials and the duties to be imposed on the surface to the commercial considerations of output. It has been observed that limits of surface finish are primarily governed by the machine and the setting of the tool. Surface finishing processes for machining surface may be classified in to two groups, namely those employing hardened steel tools such as burnishing, scraping and filing and those employing abrasive such as grinding, honing lapping, super finishing and polishing. The quality of machined surface is characterized by the accuracy of it is manufacture in respect to the dimensions specified by the designer. Every machining process leaves it is evidence on the surface that has been machined. This evidence is in the form finally spaced micro irregularities left by the cutting tool. (fig. 4). Each kind of cutting tool leaves it is own pattern that can be identified. This pattern is called surface finish or surface roughness. Whenever, two machined surfaces come contact with each other the quality of mating surfaces plays an important role in the performance and wear of the mating parts. A good surface finish is desirable. Some degree of roughness which may be extremely small is always present on any surface. After using the tool the cutting edge becomes broken or worn as in (fig. 5). The ideal surface roughness will become a natural surface roughness because of the following reasons:

1-when the cutting edge tip is broken, worn or destroyed.
2-when the formation of built up edge (B.U.E) changed as in (fig. 5). The (B.U.E) changes the angles and the shape of the cutting edge.
3-when there is a heavy vibration or there is chatter.
4-when there is a heavy friction and the cutting edge become too hot.
5-when there are defects in the work piece materials.
6-when the work piece material is too brittle.

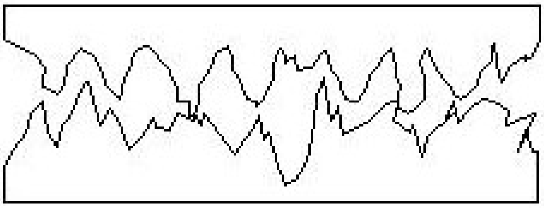

FIG. (4)

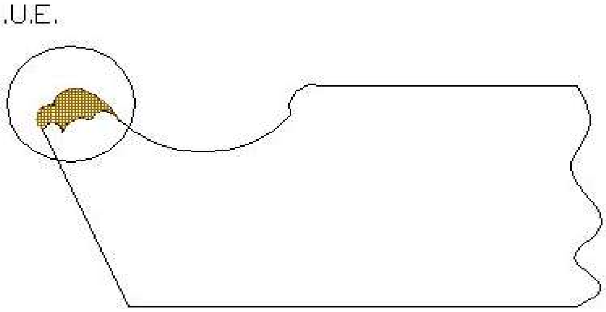

FIG. (5)

1-5-TOOL LIFE:-

The life of the tool is an important factor in metal cutting, because considerable time is lost whenever a tool must be ground or replaced and reset. Cutting tools become dull as usage continues, and their effectiveness drops. At some point in time it is necessary to replace, index, or re sharpen and reset the tool. Tool life is a measure of the length of time a tool will cut satisfactorily and mach inability may be measured in a number of ways. Sometimes tool life is expressed as a minutes between changes of the cutting tool. The life of a cutting tool is affected by the various factors mentioned below:

Machining variables:-
- **(i)** Cutting speed.
- **(ii)** Feed.
- **(iii)** Depth of cut.

2-Type of the cutting such as continuous and intermittent cutting.
3- Tool geometry.
4- Tool material.
5- Machining conditions:-
- **(i)** Temperature of the work and tool.
- **(ii)** Type of cutting fluid used.

6- Properties of material being cut.
- **(i)** Microstructure of work piece materials.
- **(ii)** Tensile strength and hardness of the material.
- **(iii)** Degree to which the material could works.

In 1906 Frederick W. Taylor reported the relationship between tool life and cutting speed as follows:

$$Vc.T^n = C$$

Where:

Vc = Cutting speed, ft/min. (m/s)
T = Tool life, min. (s)
n = Exponent depending on cutting conditions
c = Constant equal to the cutting speed for a tool life, 1min (60s)

1-6-THE CUTTING TOOL WEAR:-

In general there are five basic types of wear that affecting cutting tool wear:-

1- Abrasive wear: this type of wear is caused by small particles of the work piece "rubbing" against the tool surface, it is called (abrasive particle) which is fixed in the chip with the action of the vertical component of the force and it will abrade the tool face with the horizontal component of the force.

2- Adhesive wear: plastic deformation and friction associated with high temperatures involved in the cutting process can cause a welding action on the surfaces on the tool and work piece. In the micro-areas of contact the stress is concentrated on the small area of the irregularities of the surface between material of the work piece and the material of the tool. There will be a micro-weld point by cold welding. This micro-weld will be broken with the horizontal forces. It becomes as a bi-metallic junction.

3- Diffusion wear: Diffusion wear is caused by a displacement of atoms in the metallic crystal of the cutting element from one lattice point to another. This results in a gradual deformation of the tool surface.

4- Chemical and electrolytic wear: A chemical reaction between the tool and work piece in the presence of a cutting fluid is the cause of chemical wear. This electrolytic wear is the result of possible galvanic corrosion between the tool and work piece.

5- Oxidation wear: At high temperatures oxidation of the carbide in the cutting tool decreases it is strength and causes wear of the edge.

1-7-WEAR MODES: -

The cutting edge will be worn and it needs a new geometry to be sharp There are two modes of wear on the cutting edge:-

Mode I:-

The flank wear it's produced from the friction between the surface of cut and the flank face of the tool in the clearance angle (α).

Mode II:-

Crater wear it's the wear produced from the friction between the cutting edge and the chip in the rake angle (γ).

The two modes are shown in the (fig.6).

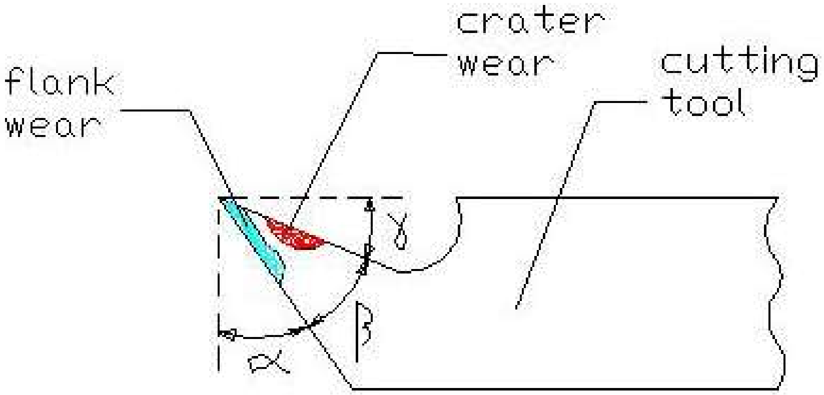

FIG (6)

1-8-CUTTING PARAMETERS: -

(i) Depth of cut (mm):-

It is the thickness of the layer of metal removed in one cut or pass measured in a direction perpendicular to the machined surface. The depth of cut is always perpendicular to the direction of the feed motion. In external longitudinal turning it is half the difference between the work diameter (D1) and the diameter of the machined surface (D2) obtained after one pass.

$$t = \frac{D_1 - D_2}{2} \qquad \text{(t = Depth of cut (mm)).}$$

(ii) Cutting speed (m/min): -

It is the travel of a point on the cutting edge relative to the surface of the cut in unit time in the process of accomplishing the primary cutting motion. For example, in lathe work when a work piece of diameter (D) rotates at a speed (N) revolution per minute the cutting speed (Vc) is given by the relation: -

$$Vc = \frac{\pi . D . N}{1000} \qquad \text{(m/min.)}$$

Where: D = Diameter of work piece (mm).

(iii) Feed (mm/rev):-

The feed or more precisely rate of feed is the travel of the cutting edge in the direction of the feed motion relative to the machined surface, in unit time. Feed is expressed either as the distance is moved by the tool in one minute or as the feed per revolution i.e. the distance of relative travel of the tool during one revolution of the work piece . It is expressed in millimeters per revolution. On a shaper feed is the distance the work is moved relative to the tool for each cutting stroke. Feed is expressed as millimeter per tooth for milling cutters and broaches. Selection of a suitable cutting speed depends up on the hardness of cutting tool and it is resistance to temperature where as feed depends on depth of cut, rigidity of cutting tool and type of cutting tool materials, rugged cutters and heavy machine tools. Lower feeds are used for finishing cuts, frail set-ups, hard work materials and weak cutters.

2.1 Tool and work-piece materials

2.1.1 Tool Material:

The cutting tool that we used is high speed steel (H.S.S) because wear is occurs easily in this type of cutting tool as in the carbide.
This cutting tool is sharpened from two sides: cutting edge and auxiliary cutting edge by angle of (45°), clearance angle that has an angle of (7°) and rake angle that has an angle of (5°), as in the fig. (7).

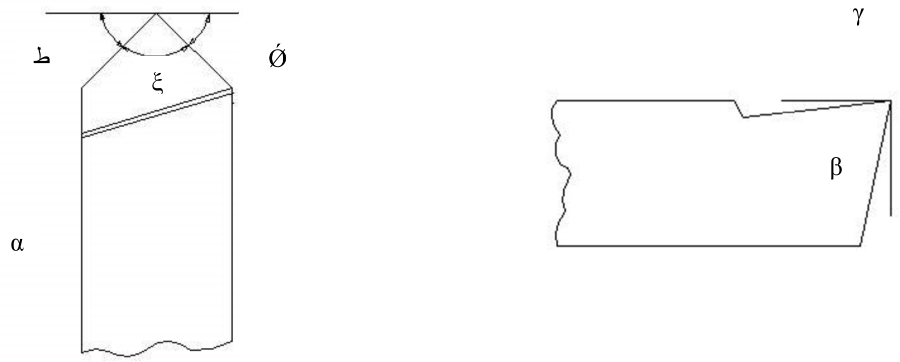

α=clearance angle 5°
γ=rake angle 7°
β=tool angle 78°
$\alpha + \gamma + \beta = \pi/2$

Fig (7)

2.1.2 Work-piece:

The specimen, which we used, is shaft. The shaft length is (500mm) and (400mm) in diameter. In our test we used four shafts that have the same properties (hardness, length and diameter), because with the increase of the length and the diameter of the shaft; wear of the cutting tool increases. The strength of the shaft is high; so the wear of the cutting tool is more as shown in the fig. (8-a & b).

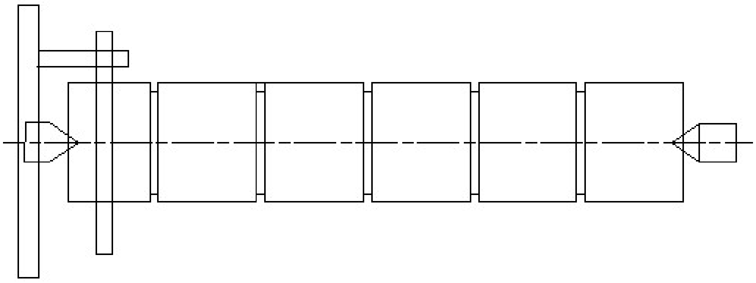

Fig (8-a)

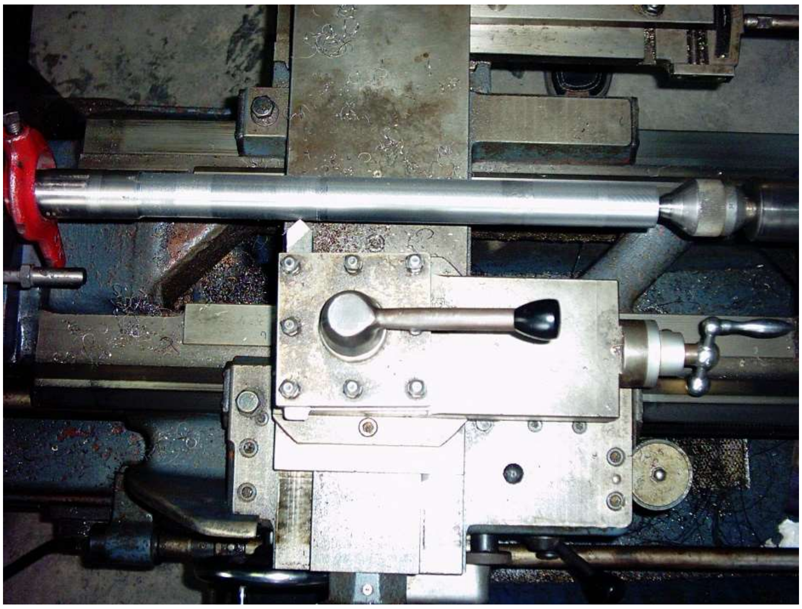

Fig (8-b)

2-2 Turning machine

The turning machine (lather) that we used in this test is from (TAKISAWA) company, Japan. Its model is (1979), having these speeds (83, 155, 255, 560, 1030, 1800) rpm, and having a range of feed between (0.05-3.75) mm for making teeth and for cutting. We worked on this turning machine by the method of (turning between two centers) carried out by supporting the work-piece between two centers. This taper machine [The features of the maximum range of the work-piece are: large diameter (10cm), length (80cm) at a small feed (0.05mm/rev) and depth of cut (0.02mm) as shown in the fig. (9)] is old and no longer used. A new turning machine (Scientific Turning) is used instead, which is controlled by computer.

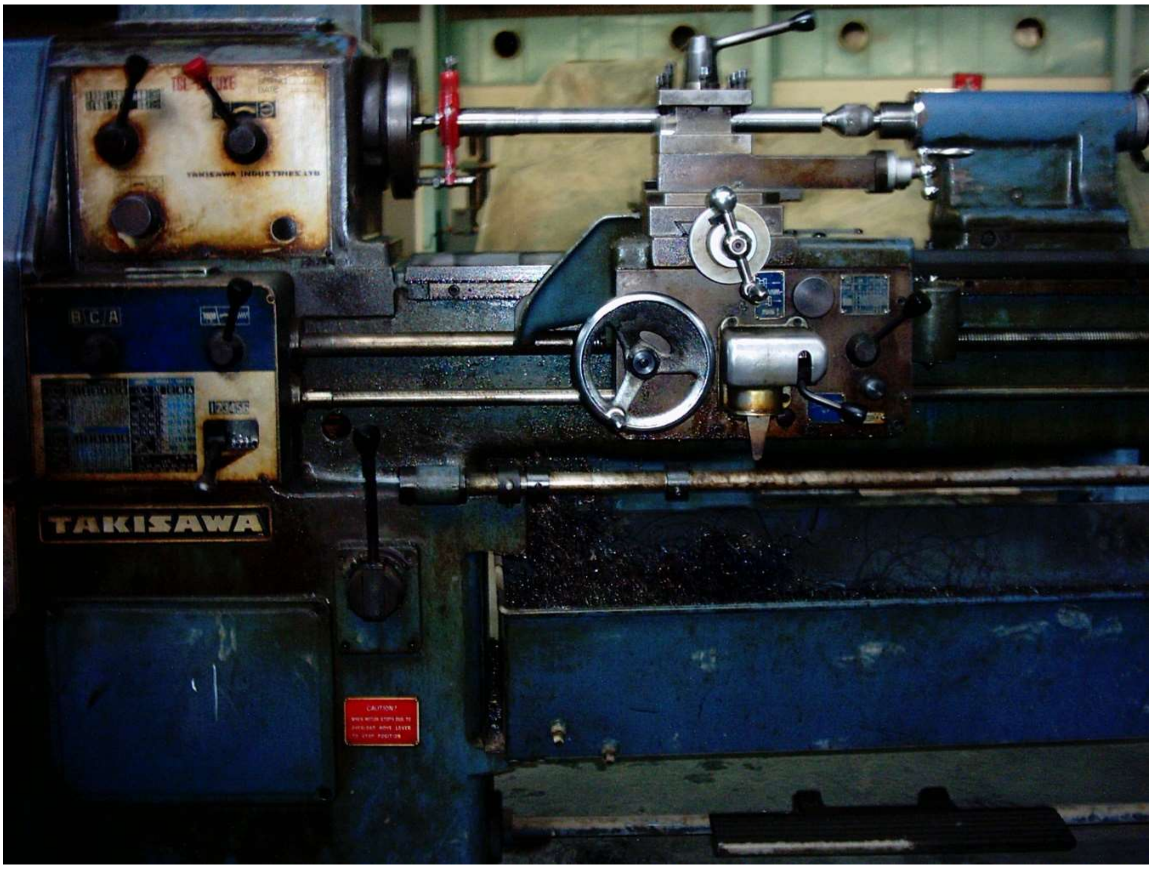

Fig (9)

2-3 Sharpening machine

We used this machine for re-sharpening the cutting tool; all three angles (cutting angle, rake angle and clearance angle) are shown on it. The brand of this machine is (GREAT CAPTAIN); it's from (MURAHASHI) company, Japan. The range of the clearance is between (0°-10°), rake angle between (0°-10°) and cutting tool between (0°-60°), also we used cooling fluids (cooling water) during cutting tool re-sharpening so as not to change the properties of the metal, as shown in fig. (10).

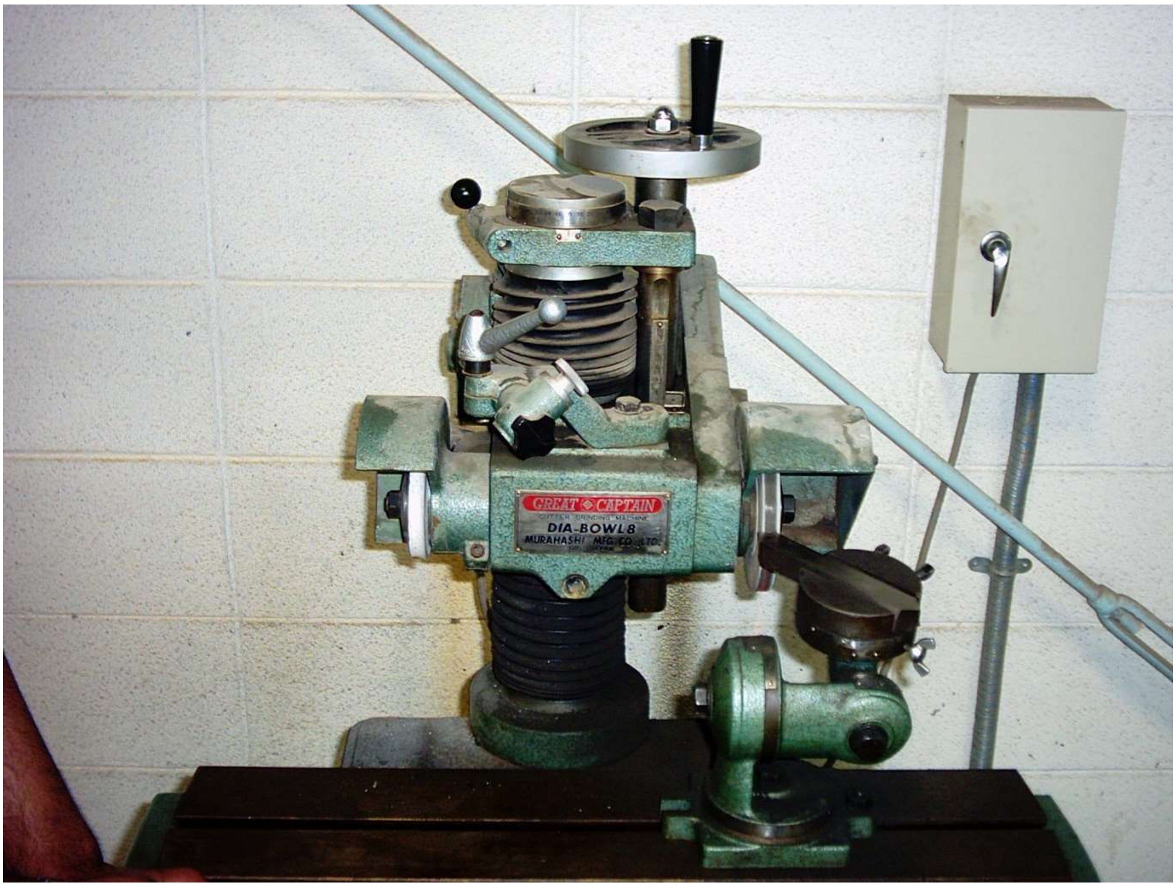

Fig (10)

2-4 Profile Projectors

Using this instrument to measuring small piece that is cannot be measured by normal instrument like vernier or micrometer. This machine is from (MITUTOYO) company, Japan. The measuring is to enlarge the dimension of the pant piece, when you put the piece you want to measure it, putting on the slide of the instrument and via the light and the lens transfer the profile of the piece into the screen in big form. The screen has two lines which are perpendicular on each other and installed to micrometer on the slide to move the slide. The accuracy of the instrument is (0.005mm), as shown in the fig. (11).

Fig (11)

In this test we used a specimen having a length of (2500 cm) and a diameter of (4cm), divided it to four equal parts, we finished each of them by using face turning. We centered both of the ends of the shaft by using (center drill) after fixing on the turning machine between centers, but in our test we did not use (chuck) because of creating vibration and cutting the entire shaft. We repeated the cutting of the shaft by using carbide steel as cutting tool, so we used carbide steel because its wear is little and for not having difference in the diameter between both ends.

The cutting tool which we prepared for doing this test as shown in the figure (7) is fixed on the turning machine and centered on it, after that we put the shaft between both centers of the turning machine as shown in the figure (8-a-b).

At the beginning we drew the cutting tool on the instrument (profile projectors) before using. On the turning machine the speed is (560 rpm.), depth of cut is (0.2mm), feed is (0.23mm/rev) and length is (420mm).

We worked on the shaft for several times, as a result the cutting tool wears by (0.04-0.05 mm) and the diameter of the shaft increases by the same value of the wearing of the cutting tool.

By measuring the dimension of the cutting tool before and after operation on the instrument (profile projectors) we knew the wearing in the tip of the cutting tool by micrometer, and we divided the shaft into three equal parts and we took the average data for each part before and after cutting as shown in the table (1).

We have three parameters to show the effect of wear:

3.2 Result and discussion

For studying the effect of the tool on the dimensional deviation of the work-piece; the following experiments are applied.

We have three parameters to show the effect of wear:

3-2.1 Effect of Feed:

In our experiment we have changed the feed (mm/rev) for monitoring its effect on wear of the tool. These results are seen in table (2) and the relation is drawn in fig (12) from this figure we see that the increasing in feed has a ground effect on the tool wear. This means that the wear increases with the increasing of feed and vice versa. For example; when the feed is taken, as 0.23 mm/rev the wear is low, it's about (0.055mm) but when the feed has a great value as (0.54mm/rev) the wear becomes more dangerous and it exceeds 0.131mm.

For the diametric deviation the wear of the tool will be translated to work-piece diameter as in figure (13). Here the increasing of the diameter is proportional to the wear of the tool tip.

Change in feed between (0.232-0.54 mm/rev), depth of cut is (0.2mm), N =560r.p.m and L=400mm are constant.

In five difference parts we measured the diameter of the shaft (each part has the length of 80mm) before and after cutting we measured the cutting tool for each length, and drawing the cutting tool after wear. This shows that by increasing the feed, the wear will increase too, as in the table (2).

3.2.2 Effect of depth of cut:

A change in the depth of cut also has an impact on the cutting process. This is due to the fact that the temperature in the secondary deformation zone (close flank face of the tool) continuously increases with depth of cut and therefore the deformation process or dimensional deviation in this zone changes as a tool.

The change in depth of cut (mm) would have effect on tool wears (mm). Generally the tool limit is set (0.15-0.5) mm as shown in table (3). We see that the increasing in depth of cut has an effect on the tool wear and vice versa, as show in fig. (14), for example when depth of cut is taken (0.2mm) the wear is little (0.045mm) but when the depth of cut has a value of (0.5mm); the wear is very (0.12mm) as shown in the figure (14).

For the diametric deviation the wear of the tool will be translated to work-piece diameter as in figure (15). Here the increase of the diameter is proportional to the wear of the tool tip.

Changing depth of the cut between (0.15-0.5), (f=0.23 mm/rev, N=560 rpm and L=400) are constant.

In five difference parts we measured the diameter of the each part that has the length of (80mm) before cutting. We measured the cutting tool from each length, after that we drew the cutting tool. This shows that when the depth of cut increases wear will increase between (0.04 – 0.12) mm. And measuring the diameter of the shaft after cutting, again this shows that the wear increases as shown in the table (3).

3.2.3 Effect of cutting speed (Vc):

A change in the cutting speed has impact on the cutting process; this is due to the fact that the temperature in the secondary deformation zone is (close to the flank face of the tool).

Continuously increase in the cutting speed and therefore the deformation process in this zone changes as whole. The change in cutting speed (Vc) would have effect on the tool wears (mm). Generally a tool wear is limited to set (typical 0.0375-0.115) mm.

For example when the cutting speed (Vc) is taken (17.87m/min) the wear is little (0.0375mm) from the first point, but when the cutting speed has a large value (202.22m/min) the wear of cutting tool is more and it exceeds (0.115mm) as in fig (16).

For the diametric deviation the wear of the tool will be translated to work-piece diameter as in figure (17). Here the increasing of the diameter is proportional to the wear of the tool tip.

Changing the speed is between (155 – 1800 rpm), but (f=0.23mm/rev, depth of cut =0.2mm and L=400mm) are constant. Like the last steps we measured the shaft, this shows that by increasing the speed; wear will increase between (0.0375 – 0.115) mm as shown in the table (4).

* In the figure (18), (19) and table (5) it is seen that with changing the cutting distance the cutting tool will wear and also the diameter of the shaft will increase as it is seen in all of the tables. In the figure (18) it's seen that by increasing the cutting distance and all of the other parameters that are constant, wear of the cutting tool will increase. It's a relationship seen in all of the curves indirectly for example in the length of (80mm) wear of the cutting tool is (0.045mm), but when the distance will increase to (240mm); wear of the cutting tool will increase to (0.06mm).

*In the figure (19) it is seen that there is a relationship between (cutting distance) and (dimensional deviation) which shows us that by increasing the cutting distance (ΔD) will increase by the same value of wear of the cutting tool, for example in the length of (80mm); (ΔD) is (0.09mm), but when the cutting distance will increase to (240mm); (ΔD) will increase to (0.135mm).

CONCLUSION: -

- In this study the dimensional deviation is successfully measured.
- The dimensional deviation of the work-piece is due to the flank of the cutting tool.
- The flank wear leads the tool tip replacing to a new position. The displacement of the tool tip is translated to a dimensional deviation on the work-piece.
- In our study, dimensional deviations of the work-piece increases gradually with the flank wear increases.
- As the depth of cut, feed & cutting speed (Vc) increase the wear of the tool, they increase the (ΔD) of the work-piece.

S. No.	L (mm)	f mm/min	D.O.C (mm)	N rpm	v m/min	D(mm)			ΔD(mm)			Wear (mm)
						$l_{0-140\,\text{mm}}$	$l_{140-280\,\text{mm}}$	$l_{280-420\,\text{mm}}$	l	l	l	
1	420	0.23	0.2	560	65.97	37.566	37.7133	37.833	0.08	0.12	0.15	0.04375
						37.48	37.59	37.68				
2	420	0.23	0.2	560	68.344	38.81	38.86	38.86	0.22	0.17	0.12	0.04
						38.59	38.69	38.76				
3	420	0.23	0.2	560	68.02	38.59	38.69	38.76	0.17	0.22	0.21	0.04
						38.42	38.47	38.55				
4	420	0.23	0.2	560	67.697	38.42	38.47	38.55	0.2934	0.25	0.2567	0.045
						38.1266	38.22	38.2933				
5	420	0.23	0.2	560	67.22	38.1266	38.22	38.2933	0.15	0.1934	0.1533	0.03
						37.9766	38.0266	38.14				

Table 1

S. No.	L (mm)	f mm/rev	D.O.C (mm)	N rpm	v m/min	D (mm)	ΔD (mm)	Wear (mm)
1	80	0.23	0.2	560	66.28	37.68	0.28	0.055
						37.4		
2	160	0.31	0.2	560	66.44	37.77	0.27	0.065
						37.5		
3	240	0.34	0.2	560	66.58	37.85	0.26	0.0825
						37.59		
4	320	0.42	0.2	560	66.69	37.91	0.12	0.0925
						37.79		
5	400	0.54	0.2	560	66.79	37.97	0.05	0.131
						37.92		

Table 2

S. No.	L (mm)	f mm/rev	D.O.C (mm)	N rpm	v m/min	D(mm)					ΔD(mm)					Wear (mm)
						l_{0-80}	l_{80-160}	$l_{160-240}$	$l_{240-320}$	$l_{320-400}$	l	l	l	l	l	
1	400	0.23	0.15	560	60.91	34.49	34.56	34.63	34.70	34.75	0.14	0.09	0.12	0.06+	0.2	0.04
						34.35	34.47	34.51	34.64	34.55						
2	400	0.23	0.2	560	68.08	38.54	38.69	38.71	38.76	38.80	0.18	0.31	0.27	0.26	0.19	0.045
						38.36	38.38	38.44	38.50	38.61						
3	400	0.23	0.3	560	67.36	38.08	38.17	38.28	38.40	38.52	0.24	0.29	0.20	0.4	0.48	0.055
						37.84	37.88	37.99	38.00	38.04						
4	400	0.23	0.4	560	66.75	37.84	37.88	37.99	38.00	38.04	0.11	0.84	0.57	0.56	0.57	0.063
						37.83	37.04	37.42	37.44	37.47						
5	400	0.23	0.5	560	62.46	35.36	35.43	35.51	35.58	35.64	0.55	0.52	0.59	0.64	0.74	0.12
						34.81	34.91	34.92	34.94	34.90						

Table 3

S. No.	L (mm)	f mm/rev	D.O.C (mm)	N rpm	v m/min	D(mm)					ΔD(mm)					Wear (mm)
						l_{0-80}	l_{80-160}	$l_{160-240}$	$l_{240-320}$	$l_{320-400}$	l	l	l	l	l	
1	400	0.23	0.2	155	17.87	36.59	36.68	36.72	36.76	36.81	0.37	0.4	0.41	0.38	0.37	0.0375
						36.22	36.28	36.31	36.38	36.44						
2	400	0.23	0.2	270	31.48	37.02	37.08	37.12	37.17	37.17	0.43	0.4	0.40	0.41	0.41	0.04
						36.59	36.68	36.72	36.76	36.81						
3	400	0.23	0.2	560	63.90	36.22	36.28	36.21	36.38	36.44	0.28	0.28	0.25	0.27	0.30	0.045
						35.94	36.00	36.06	36.11	36.14						
4	400	0.23	0.2	1030	116.65	35.94	36.00	36.06	36.11	36.14	0.30	0.29	0.28	0.29	0.28	0.06
						35.64	35.71	35.78	36.82	35.86						
5	400	0.23	0.2	1800	202.22	35.64	35.71	35.78	36.82	35.86	0.26	0.28	0.26	0.22	0.22	0.115
						35.38	35.43	35.52	35.60	35.64						

Table 4

S. No.	L (mm)	f mm/rev	D.O.C (mm)	N rpm	v m/min	D (mm)	ΔD (mm)	Wear (mm)
1	80	0.23	0.2	560	67.73	38.54 38.36	0.18	0.045
2	160	0.23	0.2	560	68.06	38.69 38.38	0.31	0.055
3	240	0.23	0.2	560	68.10	38.71 38.44	0.27	0.06
4	320	0.23	0.2	560	68.19	38.76 38.50	0.26	0.07
5	400	0.23	0.2	560	68.26	38.80 38.61	0.19	0.73

Table 5

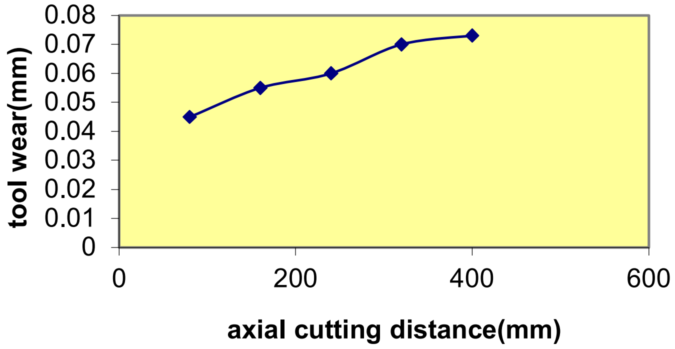

Fig18 effect of axial distance and wear

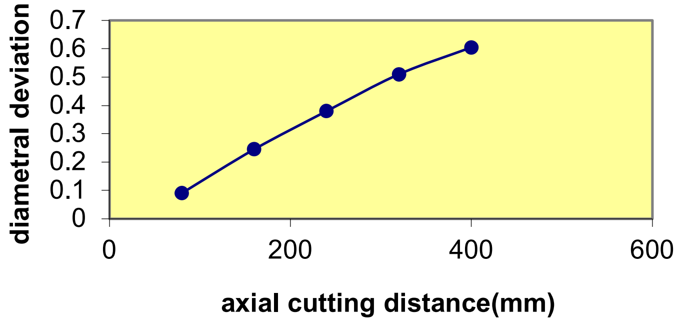

Fig19 effect of axial distance on diametral deviation

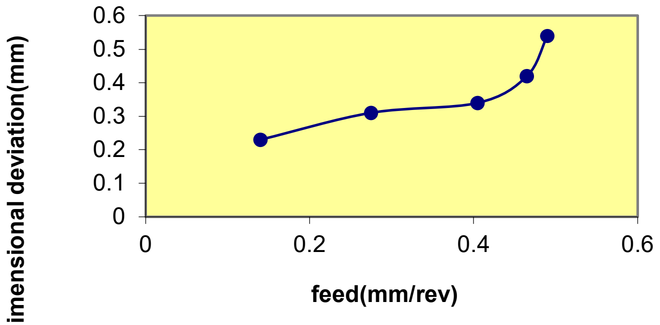

Fig20 effect of feed on dimensional deviation

References:

1- Machine Tool Engineering, by: N.G. Nagpal
Khanna publishers New-Delhi – India, 1982.

2- A Text Book OF Production Engineering, by: P.C.Sharma
Rama Nagar, New-Delhi –India, 1988.

3- Manufacturing Processes, by: B.H.Amstead, Phillip F. Ostwald and Myron L. Bargeman
John Wiley and Sons, New York, Chechester, Brisbane, Toronto and Singapore. USA-1986.

4- Internet:
-www.ozel.rci.com
-www.ercnsm.org
-www.mmsonline.com
-www.prenhall.com
-www.techspex.com
-www.mame.mu.oz.com
-www.elsevier.com
-www.manufacturing part.com